DE GRUYTER OPEN

DOI: 10.1515/aucts-2016-0002

ACTA UIVERSITATIS CIBINIENSIS – TECHNICAL SERIES
Vol. LXVIII 2016

DESIGNING A DIE FOR HYDROFORMING

VASILE Radu
Ph.D. Candidate, Department of Industrial Machinery and Equipment," Lucian Blaga" University, Sibiu, Romania, r.vasile@ulbsibiu.ro

Abstract: *Designing a die is in every application field an intensive process of bringing together know how from design, testing and every-day use from previous dies with the new application requirements. Contribution deals with a knowledge oriented, modular and feature integrated computer aided design system for die development. This paper describes the concepts behind designing a hydroforming die for sheet metal forming, with easy application-use in small workshops for testing hydroforming capabilities of different materials.*

Key words: *metal forming, sheet hydroforming, tooling design, cad design, die design*

1. Introduction

The hydroforming process is an unconventional cold forming process used in manufacturing blank tubes and sheet metal with the help of direct or indirect pressure fluid. Hydroforming is considered a special forming process because of its capabilities of forming complex cave product from one operation, being considered having a great technical and economic potential by the manufacturing companies. The process fully respects the main goal of cold forming processes – minimization of costs through optimization of weight, mechanical stretch and stiffness. [1]

Because of technological progress in every field, but especially in computer science and hydraulic systems, hydroforming has known a continuous spread in diverse industrial sectors and not only – aeronautics, car industry, aerospace, music, health, consumer good industry etc.

2. Hydroforming compared to deep-drawing

Hydroforming shares the same materials used in conventional forming processes, such as alloyed and non-alloyed steels, titanium, copper and copper alloys.

Deep-drawing process consists of transforming a blank in a cave part or more, to modify its dimensions aiming to increase depth and to decrease cross-section dimensions. [2]

The classic deep-drawing process, with circumferentially symmetric punch, begins with introducing the blank into the die, following the blank-holder to get in contact with the blank. The blank-holder presses the blank with F_{BH} force and the punch approaches and presses with F_p force.

In the hydroforming process – deep-drawing hydroforming process, all steps above apply again, a new step consists of the use of fluid pressure that replaces the drawing ring, applying a counter-pressure to the punch by pressing the blank. The comparison between these processes is represented in Figure 1.

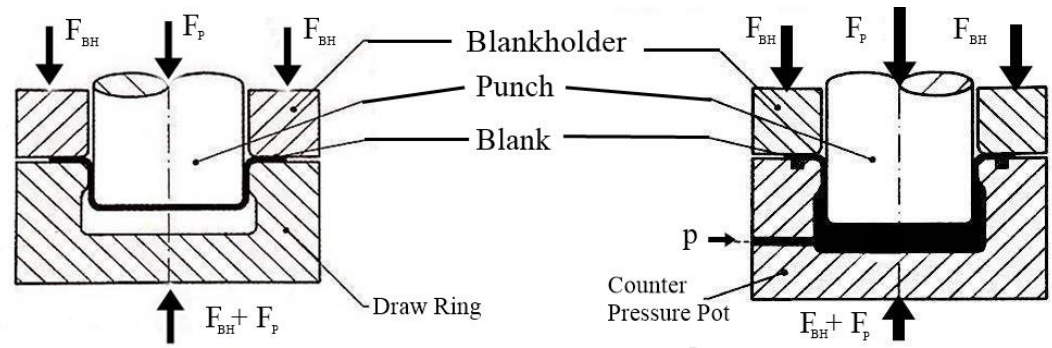

Figure 1: Deep-drawing process compared to hydroforming [3]

Hydro-mechanical hydroforming (Figure 2) is characterized by fluid pressure p that can replace either the punch or the draw ring. In order for the process to succeed, the press has to apply force F_{BH} against the fluid pressure build-up so that the die remains closed. 100.000 kN presses have been used for manufacturing this process. [4]

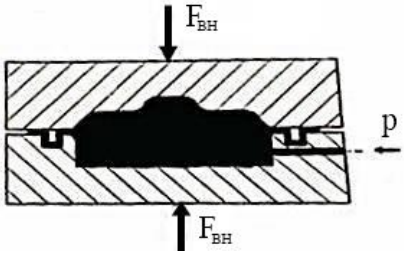

Figure 2: Hydro-mechanical hydroforming [3]

3. Hydroforming Die Development

The objective of this research is the development of a hydroforming die for hydro-mechanical hydroforming with the help of computer aided design software.

Although hydroforming has won years back it's right place among forming technologies for series production, the process is almost unknown for the wide public, lacking mass-media coverage to the dismay of many researchers. The vast majority of information and know-how regarding the technology is owned by OEMs and research centers. [5] This fact has created the main objective of this research – designing a hydroforming die that can be manufactured and the process can be exploited in small workshops by the majority of the public.

Main objectives:

- Simple design and modular form;
- Exploitation at pressures up to 400 bar;
- The possibility of manufacturing all components with universal machinery;
- Reduced costs with materials and manufacturing;
- The possibility of using common tools available for experiments;
- Use of a common working fluid;
- Proper sealing;
- The possibility of using blanks with different thicknesses;
- Realization of various complex shapes.

Combining design knowledge with the study of hydroforming die concepts by field specialists and with the requirements of the research resulted the following hydroforming die, unique hydroforming concept represented in Figure 3.

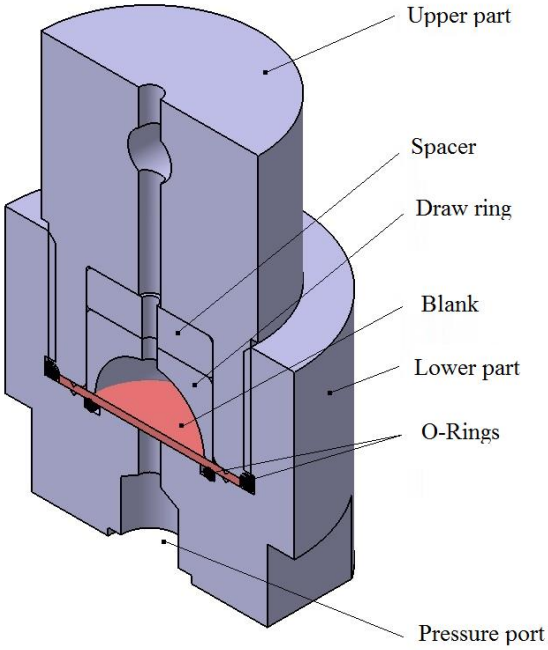

Figure 3: Die cross-section, in 3D view

The operating principle of the die - a hose nipple is screwed into the inlet pressure port at the bottom of the die. The lower part is fixed in a universal vise. The o-rings are assembeld in the provided slots. The next step is to center the blank with the help of the supperior o-ring. The upper spacer and the draw ring are assembeld in the upper part, that is afterwards screwed in the lower part. The die is prepared for experiments.

All die components have simple geometry and can be easily manufactured by universal machinery accesible in a small workshop – lathe, milling machine and drilling machine. The components are made of OL52 steel, suitable for the hydroforming process, maintaing a low aquisition cost for the die components. The o-rings are the cheapest sealing elements available and they can properly seal the current research carried out. The recommended fluids are oil, watter or water emulsion.

The upper part has a transverse through hole for screwing easier by means of a lever. Longitudinal through hole is performed to remove the air from the die. The part also has a clamping ring, as represented in the detail from Figure 4. For greater modularity there can be two upper parts built with or without the clamping ring, for effect comparison.

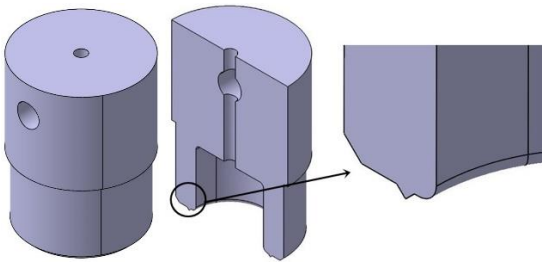

Figure 4: The upper part, cross-section

The lower part (Figure 5) presents a longitudinal through hole for easy access of the pressurized fluid into the die, forcing the blank to form against the draw ring. The end-slot of the thread was used for fitting the O-ring for sealing and centering the blank. There is also a slot for laying the clamping ring. On the circumference there are two milled faces to easily fix into the vise.

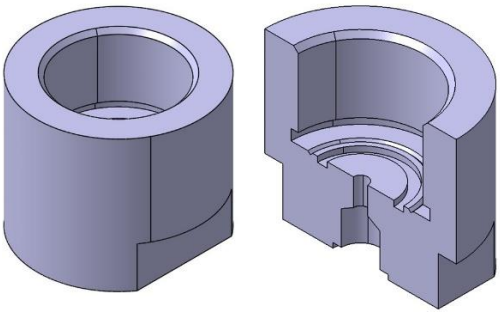

Figure 5: The lower part, cross-section

The draw ring (Figure 6) has a longitudinal through hole to remove the air and is designed to have various geometries to be formed on the blank. It has a longitudinal through hole to release the air from the cavity.

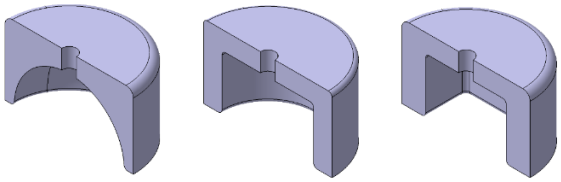

Figure 6: Different draw rings, cross-section

The sheet-metal blank shaped such as coin made of steel, copper, aluminum, or magnesium with maximum thickness of 1.5 mm and 50 mm diameter can be used for the experiments, represented in Figure 7.

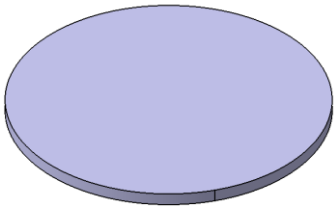

Figure 7: Sheet-metal blank

For validating the development objectives, the die has been realized and steel blanks have been tested at pressures up to 400 bar. Two different upper parts and three different drawing rings have been manufactured. The manufactured die are several hydroformed parts are represented in Figure 8.

Figure 8: Developed die and hydroformed parts

4. Conclusions

The paper was focused on developing a new concept of a hydroforming die in accordance with the objectives and minimum initial acquisition for manufacturing. The development and manufacturing of the die demonstrated that without advanced know-how in hydroforming it is possible to achieve complex shaped parts from a single operation step at minimum cost.

This continuous improvement of the hydroforming process and easier access for researchers who do not have equipment in their universities research centers can be a boost for innovative new solutions. Increasingly complex requirements of today's industrial sectors requiring lightweight products with tailored geometry and properties, economic efficiency, short production cycles and moderate use of resources are to requirements for continuous development and improvement of the hydroforming process.

5. References

1. Vasile, R., Bologa, O., Sheet Metal Hydroforming Technology – State-of-the-Art, *Applied Mechanics and Materials,* Vol. 841, pp. 3-9, (2016).
2. Bologa, O., *Prelucrări prin deformare plastică la rece*, Editura Universității, Sibiu, (1989).
3. Siegert, K., Lösch, B., *Sheet Metal Forming*, Hydroforming of Sheets, Tubes and Profiles, Fellbach, Baden-Württemberg, (1999).
4. Kleiner, M., *Neue 100.000 kN Presse für die HydroßBlechumformumg*, Hydroumformung von Blechen, Rohren und Profilen, Fellbach, Baden-Württemberg, (2001).
5. Freytag, P., Kröff, A., *Solutions for the Automotive Body Structure with Hydroforming - the ScaLight Project as an Example*, Hydroforming of sheets, tubes and profiles, Fellbach, Baden-Württemberg, (2008).